Fuzzy and PI Control of Hybrid Fuel Cell/Battery Distributed Generation Systems

K.Sudheer, K.Aravind kumar, and P.L.V.Prasanna

***Abstract*—In this paper controller design for voltage sag ride-through in hybrid fuel cell/battery energy storage distributed power generation system has been presented. As the amount of fuel cell power generation and other Distributed Generation (DG) with power electronic in the grid grows, it becomes unacceptable to disconnect generating units every time a disturbance occurs, as was common practice in the past. Keeping the VSC on line during unbalanced voltage sags becomes thus a very critical issue. Hence, modeling, controller design, and simulation study of a hybrid distributed generation system are investigated. Based on the classification of unbalanced faults that can occur in the grid, resulting in voltage sags at the bus where the hybrid power system is connected, the maximum current that the converter valves must be bale to withstand is calculated. Simulation results are given to show the overall system performance including active power control and voltage sag ride-through capability of the hybrid distributed generation system.**

***Index Terms*—Battery Energy Storage; Control; Fuel Cell; Hybrid Distributed Generation; Voltage Sag.**

I. Introduction

The energy and pollution crises are fast becoming the biggest problem around the word. As a consequence, novel renewable and clean energy power sources must be considered. One of the prevalent alternative sources of electrical power is the fuel cell. A fuel cell is a device that directly converts the chemical energy of fuel to electric energy. Recent advances in the fuel cell technology significantly improved the technical and economical characteristics of this technology [1]. Combining fuel cells with batteries yields hybrid distributed generation systems (HDGS) that make the best use of the advantages of each individual device and may meet the requirements for the above mentioned applications regarding both high power and high energy densities. Hybrid fuel cell/battery distributed generation systems can be strategically placed at any site in a power system (normally at the distribution level) for grid reinforcement, thereby deferring or eliminating the need for system upgrades and improving system integrity, reliability, and efficiency. When connected to a utility grid, important operation and performance requirements are imposed on HDGS [2]. A full-bridge inverter is practically always used for interfacing this green hybrid power source to the utility-grid. The control of the energy owing from the DC sources, to the grid must be done in order to track the maximum power point and to maintain a sinusoidal grid current with low harmonic distortion and a high power quality. To support the grid in case of disturbances it will become necessary to keep the distributed generator units connected to the grid. In the wide range of power quality disturbances, the interest focuses on voltage sags, which can severely affect the performance of the voltage source converter (VSC). Voltage sag is a drop in voltage with duration between one half-cycle and one minute [3], which is in most cases caused by a short-circuit fault. To allow hybrid distributed generation system connection to the grid, a number of grid operators require voltage sag ride-through capability already. Especially on places where hybrid distributed generation system provide for a significant part of the total power supply. Authors have been presented in [4], the fuzzy control strategy for fuel cell distributed generation systems for voltage sag mitigation and active power control in distribution systems. However, only symmetrical voltage sag has been considered in above mentioned paper. Because of most faults result in sags.

Manuscript received March 20, 2011; revised May 24, 2011.

K.Sudheer, K.Aravind kumar, and P.L.V.Prasanna are with Gitam University.

Email:sudheer29.mtech@gmail.com; Aravind.kondaji@gmail.com ; prasanna.pogiri@gmail.com.

II. Hybrid Fuel Cell/Battery Distributed Generation System Model

In this paper, a grid connected HDGS is analyzed. In order to meet the system operational requirements, a HDGS needs to be interfaced through a set of power electronic devices. The interface is very important as it affects the operation of the HDGS as well as the power grid. Fig.1 shows the block diagram of the HDG system proposed in this paper. The main components of the HDG system used in this paper comprise a Solid Oxide Fuel Cell system (SOFC), a battery, DC/DC and DC/AC converters. The mathematical models describing the dynamic behaviour of each of these components are given [2].

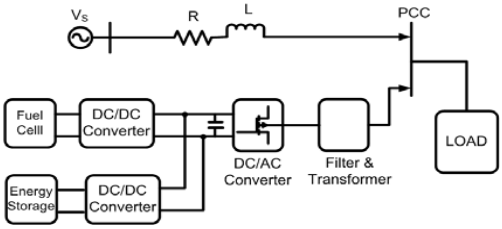

Fig. 1. Hybrid Distributed Generation System Structure

III. Control Strategy for Hybrid DG System

The control structure of proposed hybrid distributed generation system is composed of two parts. The first part is related to power management strategy between power sources. The power management strategy in the hybrid control structure is crucial for balancing between efficiency

and performance of hybrid systems. The term "power management" refers to the design of the higher level control algorithm that determines the proper power level to be generated, and its split between the fuel cell stack and battery while satisfying the power demand from the load and maintaining adequate energy in the energy storage device. The details of power management strategy between power sources and controllers design methodology for DC/DC converter and fuel cell stack have been presented by authors in [2,4]. The second part of control structure is related to voltage sag ride-through capability as explained in next section.

IV. Power Flow of Hybrid Flow of Hybrid Fuel Cell/Energy Storage During Voltage Sag

In this section, the control strategy of the hybrid fuel cell/energy storage distributed generation system has been presented. The overall control structure is illustrated in Fig. 6, which includes the power flow controller and local controllers for power conditioning units and the fuel cell. The term, ''power flow control", refers to the design of the higher-level control algorithm that determines the proper power level to be generated, and its split between the two power sources. The power flow control strategy is designed to determine the proper power level between the fuel cell stack and energy storage, while satisfying the power demand from the load and maintaining adequate energy in the energy storage device. Frequent power demand variations and unpredictable load profile are unavoidable uncertainties. Also, nonlinear and often time-varying subsystems add to the complexity of the structure of a hybrid system. Moreover, the control strategy must work real time to distribute the power between power sources based on the system conditions. Hence, real time control strategy based on fuzzy logic has been proposed for instantaneous power management.But the proposed fuzzy controller has been considered only for power management studies. So, in this paper a modification is done to improve the fuzzy logic control performance during voltage disturbances. In Fig. 7, the input and outputs of fuzzy control strategy are shown. In this control structure, the fuel cell power and supercapacitor power are determined according to the demand power (Pdemand), the output current of inverter (Iinv(k)), the error voltage (voltage difference between desired voltage and bus voltage) D Vdc(K) and its derivative, the state of charge of the supercapacitor (SOC) and the fuel cell and supercapacitor power in one time step ago (PFC(k _ 1), PES(k _ 1)). In fact, the output current of inverter and the error voltage between desired voltage and bus voltage (D Vdc(K)) and its derivative are very important during the decision process to stabilize the dc bus voltage during the occurring of voltage sag. Also, the supercapacitor power and fuel cell power in one step ago (PFC(k_1), PES(k_1)) help the fuzzy controller to decide the exact time to start charging or discharging of the supercapacitor. During the voltage sags, the power flow control strategy must be designed to manage the power between the dual power sources and the utility grid. It is proven that there is a direct proportionality between the maximum current of voltage source converter and the value of the actual input power to dc bus . In other words, if the input power to dc bus is lowered by the ratio K, the maximum value of the current will also be lowered by the same ratio. To calculate the required current rating of the voltage source converter switches to ride-through voltage sags at the grid, the maximum current has been calculated for single phase faults (sag type B and D) with zero phase angle jumps as:

$$\mathrm{Im}ax = \sqrt{2/3}\,\frac{\mathrm{KPdc}}{\mathrm{edp}+\mathrm{edn}}$$

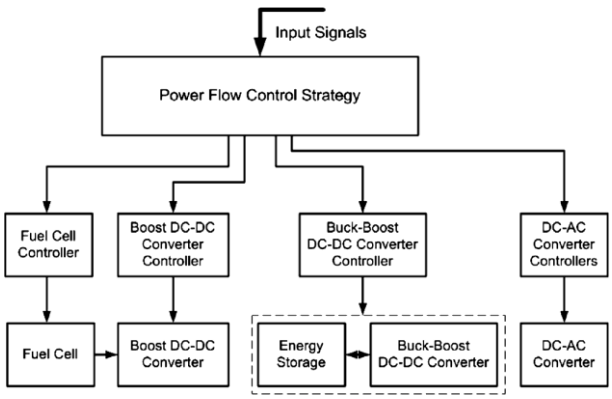

Fig. 2. Control structure of hybrid distributed generation system.

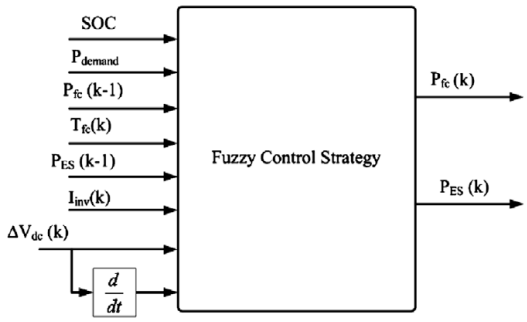

Fig. 3. Proposed fuzzy power flow control strategy.

A Fuzzy Logic Controller (FLC) is used to decide the operating point of the fuel cell stack. It is necessary to determine the fuel cell stack optimal power to assist the energy storage in charge or discharge modes. It follows the idea of load levelling, where the energy storage is used to provide assisting or generating, while operating the fuel cell at an optimum. A fuzzy logic controller determines the controller output based on the inputs using a list of if-then statements called rules. The if-part of the rules refers to adjectives that describe regions (fuzzy sets) of the input variables. A particular input value belongs to these regions to a certain degree, so it is represented by the degree of membership. To obtain the output of the controller, the degrees of membership of the if-parts of all rules are evaluated, and the then-parts of all rules are averaged and weighted by these degrees of membership.

Controller design for power electronic devices and fuel cell system.The final part of the control structure is the designing of the controllers for fuel cell power plant, DC/DC converters and grid connected inverter to track the proposed set points. Each component will be controlled by its own local controller so that the subsystem is stable and the power demand is satisfied as much as possible. In this

section the control structures of fuel cell power plant and DC–DC converters have been explained briefly and only and control strategy of grid connected voltage source converter is discussed with more details.

A. Controller design for fuel cell power plant and DC–DC converter

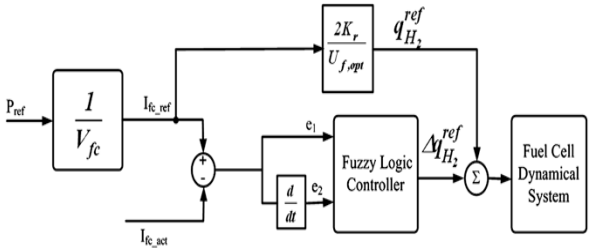

B. Control strategy of shunt-connected voltage source converter

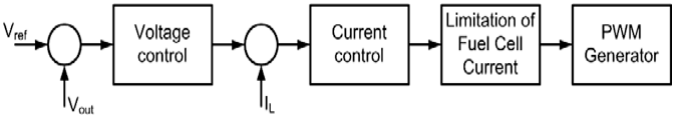

1) Control Strategy of Shunt-Connected Voltage Source Converter

Voltage sag is a reduction in the RMS voltage in the range from 0.1 to 0.9 p.u. of the nominal voltage for duration greater than half cycle and less than one minute. For hybrid distributed generation systems, like many other DG technologies, a power electronic interface is used to connect the DG system to the utility grid, with the main function of adapting the characteristics of the active power supplied from the DG to the grid. This power electronics interface usually comprises a current controlled voltage source converter (VSC) based on IGBTs, which can be controlled with Pulse Width Modulation (PWM) techniques with high switching frequencies to achieve high controllability and power quality. The drawback of using VSC is its sensitivity to voltage disturbances. For a VSC, a sudden decrease in grid voltage normally causes an increase in current, as the control attempts at maintaining the power to the DC link constant. Moreover, most faults are unbalanced and result in unbalanced voltage sag, which produce undesirable power oscillations of low order frequencies in current harmonics and poor DC-link voltage regulation. Ultimately, this can also lead to tripping of the converter due to DC overvoltage. The common practice in the past has been to disconnect the unit when a fault occurs. However, as the amount of DG with power electronic interface in the grid grows, it becomes unacceptable to loose generating units every time a disturbance occurs. Keeping the VSC on line during unbalanced voltage sags becomes thus a very critical issue. The VSC is connected is connected to the grid via a filter inductor. The dq components of currents and voltages are then used along with the reference current signals. The VSC controller is required to have main functions: Current control and DC link voltage regulation. A comparison between different types of current controllers for shunt connected VSC presented in [8] has proved that Dual Vector Current Controller (DVCC), first proposed in [9], is capable of providing sinusoidal grid currents and regulated DC-link voltage during unbalanced faults. However, an increasing in the converter rating is unavoidable if ride-through capability is desired. The current controller used here consists of two PI controllers that control the positive and negative sequence current separately and are implemented in two different rotating coordinate systems. Details on the controller and the technique adopted for decomposition of the supply voltage and grid currents into sequence components can be found in [8]. A simplified scheme for the DVCC is shown in Fig. 2.

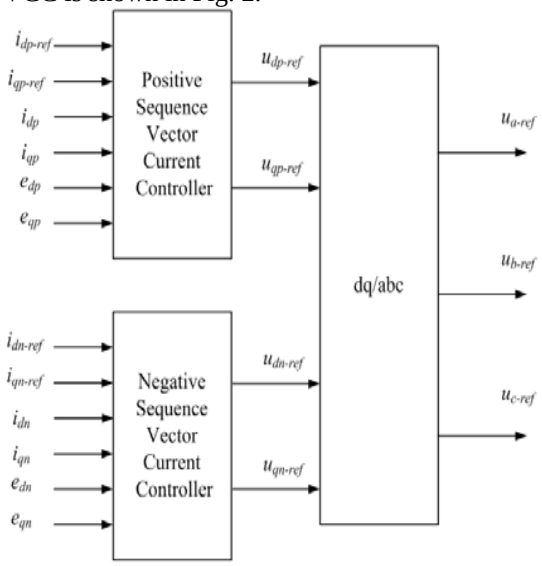

Fig. 4 . Simplified block diagram of dual vector current controller.

In order to generate proper current references, consider the complex apparent power from the grid:

$$Sg=(edqp e^{jwt} + edqn e^{-jwt}) . (idqp e^{jwt} + idqn e^{-jwt}) \quad (1)$$

By expanding (1), the following expression in matrix form can be written:

$$\begin{bmatrix} P_g \\ Q_g \\ P_{s2g} \\ P_{c2g} \end{bmatrix} = \begin{bmatrix} e_{dp} & e_{qp} & e_{dn} & e_{qn} \\ e_{qp} & -e_{dp} & e_{qn} & -e_{dn} \\ e_{qn} & -e_{dn} & -e_{qp} & e_{dn} \\ e_{dn} & e_{qn} & e_{dp} & e_{qp} \end{bmatrix} \begin{bmatrix} i_{dp} \\ i_{qp} \\ i_{dn} \\ i_{qp} \end{bmatrix} \quad (2)$$

where Pg and Q are the constant active and reactive power, respectively, while the subscripts Ps2g and Pc2g represent the second harmonic sine and cosine component of the active power. These are the oscillating powers due to the unbalance in the grid voltages. The reference currents can be calculated as follow:

$$\begin{bmatrix} i^*_{dp} \\ i^*_{qp} \\ i^*_{dn} \\ i^*_{qn} \end{bmatrix} = \begin{bmatrix} e_{dp} & e_{qp} & e_{dn} & e_{qn} \\ e_{qp} & -e_{dp} & e_{qn} & -e_{dn} \\ e_{qn} & -e_{dn} & -e_{qp} & e_{dn} \\ e_{dn} & e_{qn} & e_{dp} & e_{qp} \end{bmatrix}^{-1} \begin{bmatrix} P_{dc} - \Delta P \\ 0 \\ -\Delta P_{s2} \\ -\Delta P_{c2} \end{bmatrix} \quad (3)$$

where Pdc is the power at he dc side of the converter, which is considered equal to the active power at the ac terminals, neglecting the losses and _P, _Pc2, _Ps2 are the active powers dissipated in the filter, equal to:

$$\Delta P = R.(i_{dp}^2 + i_{qp}^2 + i_{dn}^2 + i_{qn}^2) \quad (4)$$

$$\Delta P_{c2} = 2R(i_{dp}.i_{dn} + i_{qp}.i_{qn}) + 2\omega L(i_{dp}.i_{qn} - i_{qp}.i_{dn}) \quad (5)$$

$$\Delta P_{s2} = 2R(i_{dp}.i_{qn} - i_{qp}.i_{dn}) + 2\omega L(-i_{dp}.i_{dn} - i_{qp}.i_{qn}) \quad (6)$$

According to the classification of voltage sags, having been defined by Bollen [10], the proposed classification has been reported. The positive and negative sequence components in the *dq*-coordinate system for a sag of type C have been calculated as follow:

$$e_{dp} = \frac{E}{2}\left(1 + V_{dip}\cos\psi\right)$$
$$e_{dp} = \frac{E}{2}V_{dip}\sin\psi$$
$$e_{dp} = \frac{E}{2}\left(1 - V_{dip}\cos\psi\right)$$
$$e_{dp} = \frac{E}{2}V_{dip}\sin\psi \quad (7)$$

where
E is the phase-to-phase RMS grid voltage;
Vdip is the magnitude of voltage sag;
ψ is phase angle jump during occurring voltage sag.

2) DC-link voltage regulator

In many grid connected applications, e.g. distributed generation utilising renewable sources, the DC-link voltage cannot be considered constant since the change in the grid voltage (e.g. due to voltage sags) will result in a change in the DC-link voltage. Hence, the DC-link voltage should be regulated to insure a correct operation of the VSC and to avoid damage to the power electronic switches and the DC-link capacitor. Also the DC-link current is not constant. However, its variations can be assumed to be much slower than the response time of the control system. Therefore the DC-link is modelled as a capacitor with a constant current source in parallel, which is referred to as weak DC-link model.

V. SIMULATION RESULTS

The performance of the proposed structure is assessed by a computer simulation that uses MATLAB Software. The hybrid system parameters in this study are given in Table I. For the investigated system, simulations have been run with unbalanced voltage sag magnitude (type C) between 0.3 and 0.9 p.u in steps of 0.1 using Matlab/ Simulink. The sag starts at 0.1sec and ends at 0.2sec. Moreover, it is assumed that the active power which is produced by hybrid system is constant and equal to 1p.u. The grid currents in three-phase domain and the DC-link voltage are shown in Figs. 3 and 4 for a sag of type C with magnitude 40%. The grid currents increase to above 2 pu and the DC voltage shows a variation during the transients at the beginning and end of the sag. However, the ripple during the transient is not bigger than 10% peak-to-peak and is quite quickly damped to almost zero. Maximum grid current and peak-to-peak DC voltage ripple during the sag are shown for sag type C in Figs. 5 and 6.

TABLE I.

HYBRID DISTRIBUTED GENERATION SYSTEM PARAMETERS

Fuel Cell Parameters	
Faraday's constant (*F*)	96484600[C/kmol]
Hydrogen time constant (t_{H2})	26.1 [sec]
Hydrogen valve molar constant(K_{H2})	8.43×10^{-4}
k_r Constant=$N_0/4F$	9.9497×10^{-7}
No Load Voltage (E_0)	0.6 [V]
Number of Cells (N_0)	384
Oxygen time constant (t_{O2})	2.91[sec]
Oxygen valve molar constant (K_{O2})	2.52×10^{-3}
FC internal resistance *(r)*	0.126 [Ω]
FC absolute temperature *(T)*	343 [K]
Universal gas constant *(R)*	8314.47 [J/(kmol K)]
Utilization Factor *(U_f)*	0.8
Water time constant *(t_{H2O})*	78.3 [sec]
Water valve molar constant *(K_{H2O})*	2.81×10^{-4}
DC/DC Converter Parameters	
Rated voltage (V)	200V/540V
Resistance (R)	2.3 [Ω]
Capacitance (C)	1.5 [mf]
Inductor (L)	415 [μH]
DC/AC Converter Parameters	
Rated Voltage (V)	540V dc/220V ac
Rated Power (W)	100KW
R_s (Ω)	0.9(mΩ)
L_s (H)	0.01(mH)
f_s (Hz)	50(Hz)
Controllers Parameters	
K_p=2.6 (70% of deadbeat)	K_I = 0.0016
K_{pdc} = 0.2	T_{idc} = 0.005sec

The maximum DC voltage ripple is ± 0.25% around the nominal value for sag magnitudes below 30%.

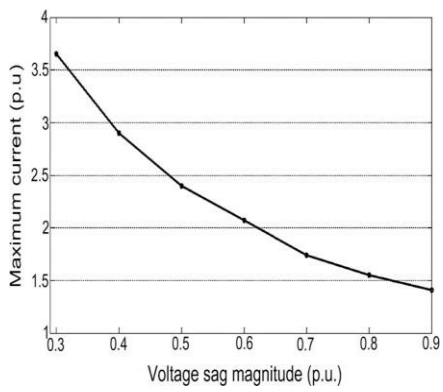

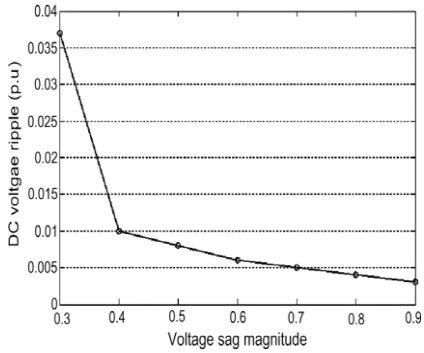

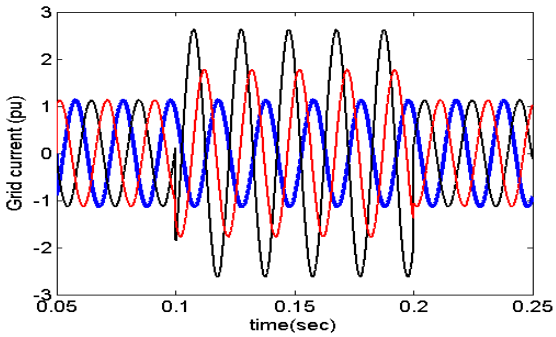

Fig. 3. Grid currents for 40% sag type C.

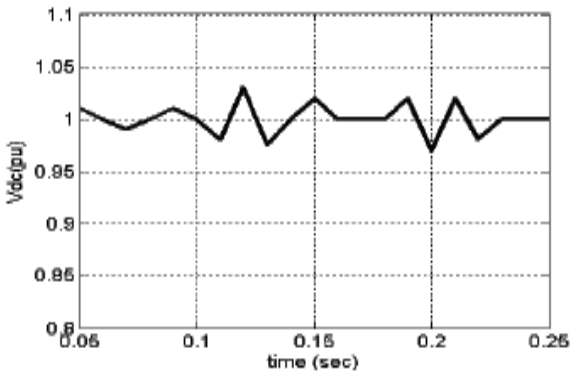

Fig. 4. DC voltage for 40% sag type C.

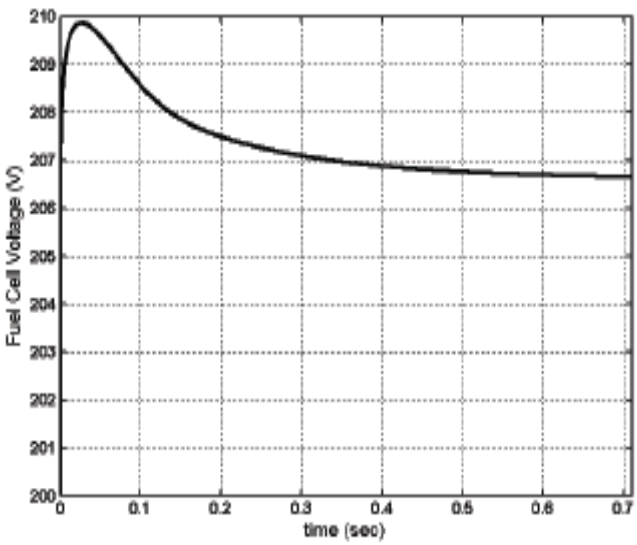

Fig. 6. Variation of Fuel Cell Voltage

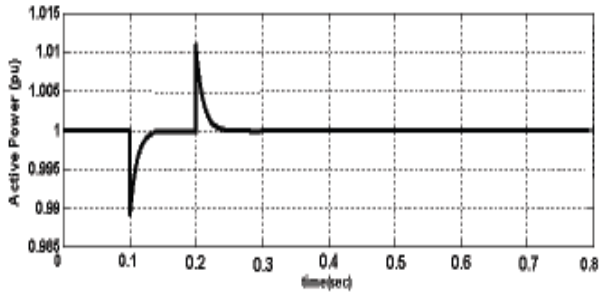

Fig.5. Produced Active Power by hybrid distributed generation system

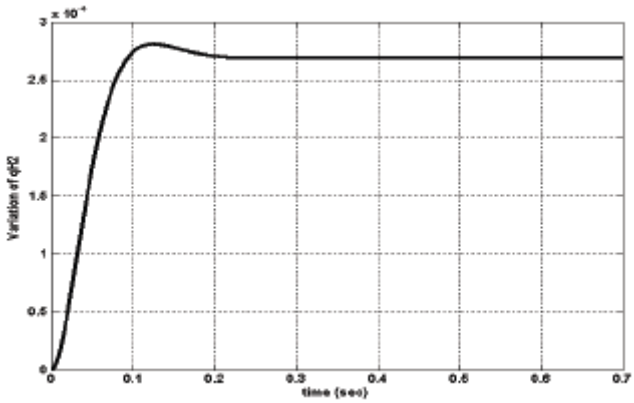

Fig. 7. Variation of hydrogen molar flow

VI. CONCLUSIONS

In this paper, the design of control strategy for hybrid fuel cell/ Battery distributed generation system has been investigated. Modeling, control, and simulation study of a HDG system is investigated in this paper. A validated SOFC dynamic model, is used to model the fuel cell power plant. The state space models for the boost DC/DC converter and the three-phase inverter are also discussed. Then by designing proper controllers the capability of HDG for active power control and voltage sag ride through has been demonstrated.

REFERENCES

[1] S. Rahman, "Fuel cell as a distributed generation technology", *In Proceedings of IEEE power engineering society summer meeting,2001.*

[2] A.Hajizadeh, M.A.Golkar, "Intelligent Power Management Strategy of hybrid Distributed Generation System", *International Journal of Electrical Power and Energy Systems 29 (2007) 783–795.*

[3] IEEE Recommended Practice for Monitoring Electric Power Quality, *IEEE Std.1159-1995, New York, IEEE, 1995.*

[4] A.Hajizadeh, M.A.Golkar, "Fuzzy Control of Fuel Cell Distributed Generation Systems", *Iranian Journal of Electrical & Electronic Engineering (IJEEE)*, Vol.13, No 1& 2, Jan. 2007.

[5] J. Padull´es, G. W. Ault, and J. R. McDonald, "An integrated SOFC plant dynamic model for power system simulation," *J.Power Sources, pp. 495–500, 2000.*

[6] J.H.Lee, T.R. Lalk, and A.J.Appleby, "Modeling electrochemical performance in large scale proton exchange membrane fuel cell stacks", Journal of Power Sources, 1998, pp 258-268.

[7] Z. Yang, C. Shen, L. Zhang, M.L. Crow, and S.Atcitty, "Integration of a StatCom and Battery Energy Storage", *IEEE Transactions on Power System*, Vol. 16, No. 2, May 2001, pp 254- 260.

[8] G.Saccomando, J. Svensson, "Transient Operation of Grid Connected Voltage Source Converter under Unbalanced Voltage Conditions", *in Proc.IEEE Industry Application Society Annual Meeting 2001*, vol.4, pp.2419-2424.

[9] H.Song, K.Nam, "Dual Cuurent Control Scheme for PWM Converter Under Unbalnced Input Voltage Conditions," *IEEE Trans.on Industrial Electronics*, vol.46, pp.953-959,October 1999.

[10] M.H.J.Bollen, Understanding power quality problems: voltage sags and interruptions, New York, *IEEE Press,1999.*

Mr. K. Sudheer received his B.E degree from Andhra University, Visakhapatnam in the Year 2008.He is now pursuing his Masters with power systems as Specialization from Gitam University, Visakhapatnam. His areas of interest include Hybrid Power systems, renewable energy resources, power Quality improvement.

Mr. K. Aravind Kumar received his B.E degree from Andhra University, Visakhapatnam in the Year 2002.He has done his Masters with Control systems as Specialization from JNTU, Anantapur. His areas of interest include Hybrid Power systems, SCADA, Wavelet transforms for power Quality improvement.

Mrs. P. L. V. Prasanna received her B.E degree in Electrical Engineering from Andhra University, Visakhapatnam in the Year 2002.She has done her Masters with Power Systems as Specialization from JNTU, and Anantapur. Her areas of interest include Power system analysis, Optimization Techniques.